PM051

INSTRUCTION MANUAL FOR

RUGER® SUPER REDHAWK®

DOUBLE-ACTION REVOLVERS

– RUGGED, RELIABLE FIREARMS® –

READ THE INSTRUCTIONS AND WARNINGS IN THIS MANUAL CAREFULLY BEFORE USING THIS FIREARM

© 2025 Sturm, Ruger & Co., Inc.

This manual may not be reproduced in whole or in part without the express written permission of Sturm, Ruger & Co., Inc.

For Service on This Model Please Call:
(336) 949-5200 (See p. 30)

THIS INSTRUCTION MANUAL SHOULD ALWAYS ACCOMPANY THIS FIREARM AND BE TRANSFERRED WITH IT UPON CHANGE OF OWNERSHIP, OR WHEN THE FIREARM IS LOANED OR PRESENTED TO ANOTHER PERSON

RUGER.COM

KY 4/2025 R26

State-By-State Warnings

Certain states require by law that their own specified warning notices in larger-than-normal type be conspicuously included by the manufacturer, distributor or retailer with firearms sold in that state. Sturm, Ruger & Co., Inc. sells its products in compliance with applicable laws and regulations. Because our products may be sold in these states, we include the following:

California:

⚠ WARNING

"Firearms must be handled responsibly and securely stored to prevent access by children and other unauthorized users. California has strict laws pertaining to firearms, and you may be fined or imprisoned if you fail to comply with them. Visit the Web site of the California Attorney General at https://oag.ca.gov/firearms for information on firearm laws applicable to you and how you can comply.

Prevent child access by always keeping guns locked away and unloaded when not in use. If you keep a loaded firearm where a child obtains and improperly uses it, you may be fined or sent to prison.

If you or someone you know is contemplating suicide, please call the national suicide prevention lifeline at 1-800-273-TALK (8255)."

⚠ ADVERTENCIA

"Las armas de fuego deben manipularse de manera responsable y segura para evitar el acceso de niños y otros usuarios no autorizados. California tiene leyes estrictas relacionadas con armas de fuego, y usted puede ser multado o encarcelado si no las cumple. Visite el sitio web del Procurador General de California en https://oag.ca.gov/firearms para obtener información sobre las leyes de armas de fuego que le son aplicables y cómo puede cumplirlas.

A los niños los atraen las armas de fuego y las pueden hacer funcionar. Ellos pueden causarse lesions graves y la muerte. Evite que los niños tengan accesso a las armas de fuego guardándolas siempre con llave y descargadas cuando no las esté utilizando. Si usted tiene un arma de fuego cargada en un lugar en que un niño tiene acceso a ella y la usa indebidamente, le pueden dar una multa o enviarlo a la carcel.

Si usted o alguien que conoce está pensando en suicidarse, llame a la línea nacional de prevención del suicidio al 1-800-273-TALK (8255)."

Connecticut:

"UNLAWFUL STORAGE OF A LOADED FIREARM MAY RESULT IN IMPRISONMENT OR FINE."

Florida:

"IT IS UNLAWFUL, AND PUNISHABLE BY IMPRISONMENT AND FINE, FOR ANY ADULT TO STORE OR LEAVE A FIREARM IN ANY PLACE WITHIN THE REACH OR EASY ACCESS OF A MINOR UNDER 18 YEARS OF AGE OR TO KNOWINGLY SELL OR OTHERWISE TRANSFER OWNERSHIP OR POSSESSION OF A FIREARM TO A MINOR OR A PERSON OF UNSOUND MIND."

Maryland:

"WARNING: Children can operate firearms which may cause death or serious injury. It is a crime to store or leave a loaded firearm in any location where an individual knew or should have known that an unsupervised minor would gain access to the firearm. Store your firearm responsibly!"

Massachusetts:

"WARNING FROM THE MASSACHUSETTS ATTORNEY GENERAL: This handgun is not equipped with a device that fully blocks use by unauthorized users. More than 200,000 firearms like this one are stolen from their owners every year in the United States. In addition, there are more than a thousand suicides each year by younger children and teenagers who get access to firearms. Hundreds more die from accidental discharge. It is likely that many more children sustain serious wounds, or inflict such wounds accidentally on others. In order to limit the chance of such misuse, it is imperative that you keep this weapon locked in a secure place and take other steps necessary to limit the possibility of theft or accident. Failure to take reasonable preventive steps may result in innocent lives being lost, and in some circumstances may result in your liability for these deaths."

New Jersey:

"IT IS A CRIMINAL OFFENSE, PUNISHABLE BY A FINE AND IMPRISONMENT, FOR AN ADULT TO LEAVE A LOADED FIREARM WITHIN EASY ACCESS OF A MINOR."

New York:

"THE USE OF A LOCKING DEVICE OR SAFETY LOCK IS ONLY ONE ASPECT OF RESPONSIBLE FIREARM STORAGE. FOR INCREASED SAFETY, FIREARMS SHOULD BE STORED UNLOADED AND LOCKED IN A LOCATION THAT IS BOTH SEPARATE FROM THEIR AMMUNITION AND INACCESSIBLE TO CHILDREN AND UNAUTHORIZED PERSONS."

North Carolina:

"Any person who resides in the same premises as a minor, owns or possesses a firearm, and stores or leaves the firearm (i) in a condition that the firearm can be discharged and (ii) in a manner that the person knew or should have known that an unsupervised minor would be able to gain access to the firearm, is guilty of a Class 1 misdemeanor if a minor gains access to the firearm without the lawful permission of the minor's parents or a person having charge of the minor and the minor:
(1) Possesses it in violation of G.S. 14-269.2(b);
(2) Exhibits it in a public place in a careless, angry, or threatening manner;
(3) Causes personal injury or death with it not in self defense; or
(4) Uses it in the commission of a crime."

Washington:

"(i) CAUTION: Although state and local laws do not differ, federal law and state law on the possession of firearms differ. If you are prohibited by federal law from possessing a firearm, you may be prosecuted in federal court. State permission to purchase a firearm is not a defense to a federal prosecution;

(ii) CAUTION: The presence of a firearm in the home has been associated with an increased risk of death to self and others, including an increased risk of suicide, death during domestic violence incidents, and unintentional deaths to children and others."

Wisconsin:

"IF YOU LEAVE A LOADED FIREARM WITHIN THE REACH OR EASY ACCESS OF A CHILD YOU MAY BE FINED OR IMPRISONED OR BOTH IF THE CHILD IMPROPERLY DISCHARGES, POSSESSES, OR EXHIBITS THE FIREARM."

* *

Please check with your licensed retailer or state police for additional warnings which may be required by local law or regulation. Such regulations change constantly, and local authorities are in the best position to advise you on such legal matters.

FIREARMS SAFETY IS YOUR RESPONSIBILITY

SAFETY MUST BE THE FIRST AND CONSTANT CONSIDERATION OF EVERY PERSON WHO HANDLES FIREARMS AND AMMUNITION.

This instruction manual is designed to assist you in learning how to use and care for your RUGER® SUPER REDHAWK® revolver properly. Please contact us if you have any questions.

Only when you are certain you fully understand the manual and can properly carry out its instructions should you practice loading, unloading, etc. with live ammunition. If you have any doubts about your ability to handle or use a particular type of firearm safely, you should seek supervised instruction. Such personalized instruction often is available from local firearm retailers, gun clubs or police departments. If none of these sources can help visit nra.org to obtain information about where you can receive training.

The person possessing a firearm has a full-time job. You cannot guess; You cannot forget; You must know how to use your firearm safely. Do not use any firearm without having a complete understanding of its particular characteristics and safe use. Remember: There is no such thing as a foolproof firearm.

TABLE OF CONTENTS

State-By-State Warnings 3
Nomenclature 9
Locking Device Installation Instructions 10
General Information and Mechanical Characteristics 12
Ammunition 13
Ammunition Information for Super Redhawk® 10MM AUTO 14
Special Safety Warning For Super Redhawk® Alaskan 14
Handling 15
Dry-Firing 15
To Load and Fire 16
To Uncock (Decock) The Revolver 18
Special Instructions for 10MM AUTO Moon Clips 20
To Unload or Eject Cartridge Cases 21
Disassembly 22
Reassembly 23
Check Your Revolver's Function 24
Care and Cleaning 25
Ejector Cleaning Instructions 26
Care of Stainless Steel Revolvers 27
Attaching Ruger Scope Rings 27
Sights 28
Storage 29
Service and Parts Policy 30
Shipping Firearms for Repair 30
Ordering Parts 31
Parts List 32
Exploded View 34
Super Redhawk® Alaskan Supplemental Parts List & Exploded View 36
Super Redhawk® 10MM AUTO Supplemental Parts List & Exploded View 37
The Basic Rules of Safe Firearms Handling 38
Warranty Information 44

"Ruger" is a registered U.S. trademark.

WARNINGS OF GREAT IMPORTANCE ARE FOUND ON THE FOLLOWING PAGES:

Locking Devices	10	Firing	18
Alterations	12	Disassembly	21
Ammunition	13	Lubrication	25
Lead Exposure	13	Storage	29
Recoil	14	Shipping	30
Handling	15	Parts Purchasers	31
Cylinder Interlock	16		

OTHER CAUTIONS AND WARNINGS APPEAR THROUGHOUT THE MANUAL.

NOMENCLATURE

In these illustrations the frequently used operating components are identified.

NOTE: Ruger offers firearms in a variety of colors and configurations. The images here and those used throughout the manual are representative and meant for illustrative purposes. The aesthetics, features, and configuration of your revolver may vary from what is represented here.

Figure 1

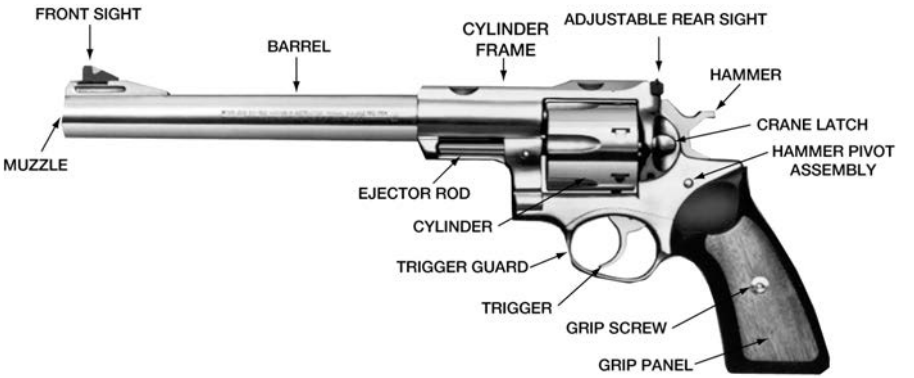

Figure 2

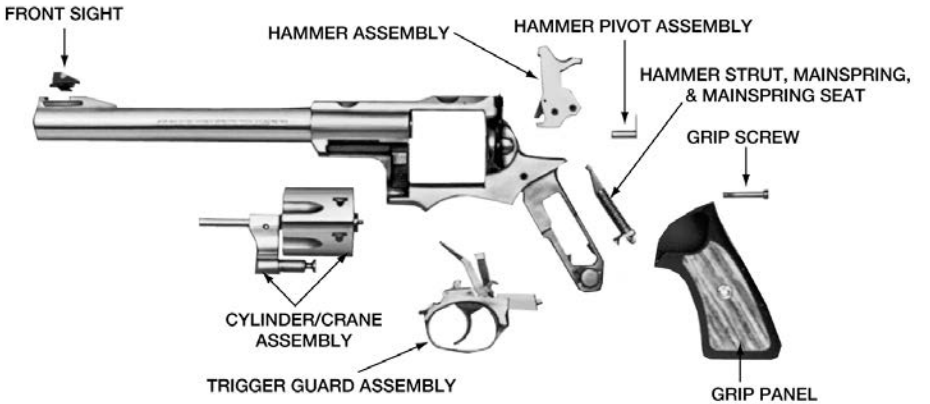

LOCKING DEVICE INSTALLATION INSTRUCTIONS

WARNING – USE OF LOCKING DEVICES

Do not store keys in lock.

- Always keep your firearm pointed in a safe direction, including when you are installing or removing your locking device.
- Always verify that your firearm is completely **unloaded** before installing your locking device.
- Do not install locking devices in the trigger guard unless the instructions specifically require it; otherwise always keep your fingers and locking device outside the trigger guard during device installation and removal.
- Store firearms, ammunition and keys separately and securely, away from children and careless adults; do not store your firearm with the keys in the locking device.
- Do not attempt to work the action of your firearm with the locking device in place; this may damage your firearm.
- While locking devices are an important aid to security measures, they are not a substitute for safe firearm handling and proper storage. Remember that any mechanical device can be bypassed with enough time, knowledge, determination and equipment.

LOCKING DEVICES MUST BE USED SAFELY AND RESPONSIBLY

It is important to use the locking device on your Ruger® firearm when the firearm is stored or immediate use is not planned.

Keep the muzzle pointed in a safe direction and your fingers outside the trigger guard at all times!

To Install the Factory-Supplied Locking Device:

1. Be sure the firearm is completely unloaded and contains no cartridges or cartridge cases!
2. Completely swing out the cylinder.

3. Insert the cable through the cylinder as shown in Figure 3a.

   For .22 Hornet Super Redhawk Revolvers: Apply the lock by placing the cable through the frame and trigger guard as shown in Figure 3b. Do not apply the cable directly to the trigger guard! Only apply the cable as shown in Figure 3b.

4. To lock: With the key turned to the farthest clockwise position, insert the loose end of the cable into the lock. Turn the key counterclockwise and remove it from the lock.

5. Once the lock is securely closed, pull firmly on the lock to test the connection and be sure it is locked. Do not leave or store your firearm with the key in the lock! Store your locked, unloaded firearm and the key in secure, separate locations, away from ammunition, children, and unauthorized adults.

Figure 3a

Correct installation of the lock on a large caliber Ruger® Super Redhawk® revolver.

Figure 3b

Correct installation of the lock on a Ruger® Super Redhawk® revolver chambered for .22 Hornet.

FIREARMS ARE DANGEROUS WEAPONS.

READ THE INSTRUCTIONS AND WARNINGS IN THIS MANUAL THOROUGHLY AND CAREFULLY BEFORE USE.

WARNING–ALTERATIONS

This product was designed to function properly in its original condition. Alterations can make it unsafe. Do not alter any part or add or substitute parts not made or sold by Sturm, Ruger & Co., Inc.

DO NOT ALTER ANY FIREARM

GENERAL INFORMATION AND MECHANICAL CHARACTERISTICS

The RUGER® SUPER REDHAWK® revolver is a double-action firearm which is specifically designed for hunting and target shooting with heavy magnum cartridges and embodies many features found in the famous RUGER® REDHAWK® and GP100® revolvers. It is the second of an entirely new generation of Ruger double action revolvers. The unique frame extension permits the use of full wrap-around style grips of any desired configuration. This feature reduces overall weight. The crane and cylinder assembly of the Super Redhawk revolver locks directly into the frame, both at the rear of the cylinder and at the front of the crane. The ejector rod serves only as an ejector – it does not rotate with the cylinder. This mechanism is readily removable without tools and dismantles, along with the cylinder/crane group, into a small number of subassemblies for inspection and cleaning (see Figure 2, pg. 9). The internal parts are installed either through the top or bottom of the grip-frame; therefore, no side plate is needed. The resulting double solid frame contributes greatly to the extraordinary strength and reliability of these revolvers. The massive extended frame and use of Ruger integral scope mounting system on the wide top strap provide a solid scope mounting system.

The RUGER® SUPER REDHAWK® revolver has a transfer bar which is connected directly to the trigger. The transfer bar safety system provides that the hammer blow can be transmitted to the firing pin only when the trigger is pulled all the way to the rear. This is a positive internal safety feature.

Ruger® Super Redhawk® revolvers chambered for the .454 Casull and .480 Ruger cartridges have unfluted cylinders.

Despite their many highly desirable features, Ruger® revolvers–as with all firearms–must at all times be handled with strict attention to correct safety practices, and be inspected frequently to assure the firearm is working properly.

AMMUNITION

The correct caliber is marked on each revolver. Ruger revolvers are designed for use with cartridges of the correct caliber which are manufactured in accordance with U.S. Industry Standards. Be certain to use proper cartridges of the correct caliber. See "Care and Cleaning," p. 25, for important information on chamber cleaning.

RUGER® SUPER REDHAWK® revolvers chambered in .44 Rem. Mag. can fire both .44 Rem. Mag. and .44 S&W Spl. cartridges.

SUPER REDHAWK® revolvers chambered in .454 Casull will function with both .454 Casull and .45 Colt cartridges.

SUPER REDHAWK® revolvers chambered in .480 Ruger should be used ***only*** with ammunition of that specific caliber.

The eight-shot SUPER REDHAWK® is chambered in .22 Hornet.

AMMUNITION (CARTRIDGES) NOTICE

WE SPECIFICALLY DISCLAIM RESPONSIBILITY FOR ANY DAMAGE OR INJURY WHATSOEVER OCCURRING IN CONNECTION WITH, OR AS THE RESULT OF, THE USE IN THE SUPER REDHAWK REVOLVER OF FAULTY OR NON-STANDARD OR "RE-MANUFACTURED" OR HAND LOADED (RELOADED) AMMUNITION OR OF CARTRIDGES OTHER THAN THOSE FOR WHICH THE FIREARM WAS ORIGINALLY CHAMBERED.

WARNING – AMMUNITION

Use only new, factory ammunition of the correct caliber.

Death, serious injury, and damage can result from the wrong ammunition, bore obstructions, powder overloads or incorrect cartridge components.

Always wear shooting glasses and hearing protection.

IMPROPER AMMUNITION DESTROYS FIREARMS

WARNING – LEAD EXPOSURE

Discharging firearms in poorly ventilated areas, cleaning firearms, or handling ammunition may result in exposure to lead and other substances known to the State of California to cause birth defects, reproductive harm, and other serious physical injury. Have adequate ventilation at all times. Wash hands thoroughly after exposure.

SHOOTING OR CLEANING FIREARMS MAY EXPOSE YOU TO LEAD

AMMUNITION INFORMATION FOR RUGER® SUPER REDHAWK® REVOLVERS CHAMBERED IN 10MM AUTO

NOTE: A package of three 10MM AUTO moon clips are supplied with the revolver and are required to allow proper ejection of the 10MM AUTO rimless cases.

See "SPECIAL INSTRUCTIONS FOR 10MM AUTO MOON CLIPS" on page 20.

The 10MM AUTO SUPER REDHAWK® will function, and has been tested, with 40 S&W caliber ammunition, but may misfire (fail to fire) with some commerical ammunition. For this reason, Ruger does not recommend the use of 40 S&W ammunition in this revolver.

RUGER® SUPER REDHAWK® revolvers are designed for use with cartridges of the correct caliber which are manufactured in accordance with U.S. Industry Standards. Be certain to use proper cartridges of the correct caliber. See page 25 of the enclosed instruction manual ("Care and Cleaning") for important information on chamber cleaning.

SPECIAL SAFETY WARNING FOR SUPER REDHAWK ALASKAN

⚠ WARNING – RECOIL

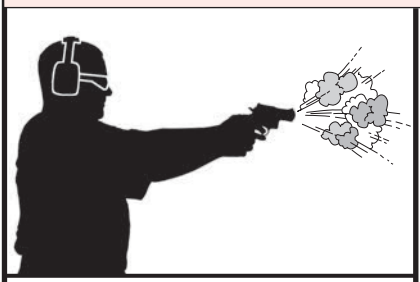

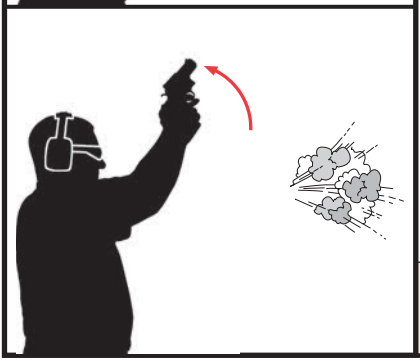

Ruger® Super Redhawk® revolvers are chambered for very powerful cartridges, as they are intended for hunting and protection against large, potentially dangerous game.

Because of this power, they necessarily develop heavy recoil when fired. Shooters should be prepared for this and always maintain a very firm, secure grip when firing.

Failure by the shooter to control heavy recoil can result in property damage or severe personal injury if the revolver is permitted to recoil upwards or backwards in an uncontrolled manner.

Minors and those who lack sufficient strength to control this heavy recoil should not be permitted to fire the revolver.

HEAVY RECOIL CAN CAUSE SERIOUS INJURY IF UNCONTROLLED

HANDLING

CARRYING: The Super Redhawk® revolver can be carried with all chambers loaded. When the hammer and trigger are fully forward, the transfer bar is lowered out of its firing position and the hammer rests directly on the frame.

WARNING – HANDLING

If the trigger is held to the rear, the firearm can fire if the hammer strikes the transfer bar. Note that it need not be a deliberate effort to pull the trigger. Any situation where the trigger attains its rearward position and permits the transfer bar to be interposed between the hammer and the firing pin can cause the cartridge under the firing pin to discharge.

NEVER DROP OR STRIKE THE REVOLVER – COCKED OR UNCOCKED. CARRY AND HANDLE THE REVOLVER IN SUCH A MANNER THAT THE HAMMER AND TRIGGER WILL NOT BE STRUCK.

NEVER CARRY ANY REVOLVER WITH THE HAMMER COCKED OR THE TRIGGER HELD TO THE REAR

DRY-FIRING

"Dry Firing" is practicing the trigger pull of the empty revolver for practice and familiarity. The Super Redhawk® revolver can be dry-fired without damage to the firing pin or internal components.

Be sure that the revolver is unloaded before handling. Be sure of your bullet stop, even when dry-firing for practice. Do not dry-fire the revolver with the plastic 'safety disc' on the cylinder.

TO LOAD AND FIRE

(SEE PAGE 20 FOR 10MM AUTO REVOLVERS)

BE SURE THE REVOLVER IS POINTED IN A SAFE DIRECTION AND IS NEVER COCKED WHILE LOADING.

1. Press the crane latch and guide cylinder out of frame to the left to its loading position (see Figure 4).

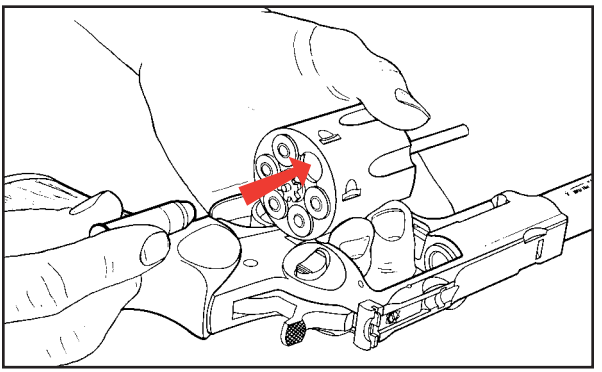

Figure 4
LOADING THE REVOLVER.

2. Insert cartridges and gently close cylinder, making sure it is securely latched. Do not "flip" the cylinder open or shut.

   NOTE: The revolver has a cylinder latch that locks the rotation of the cylinder before a shot is fired. This cylinder latch rides on the outside circumference of the cylinder where the stop notches are cut in the cylinder. The cylinder latch is designed to leave a line around the outside of the cylinder between the notches. This is normal and is an indication that your revolver is funtioning properly.

⚠ WARNING – CYLINDER INTERLOCK

When correctly operated, the cylinder cannot be opened when the hammer is cocked, and the hammer/trigger mechanism is not able to be operated until the cylinder is locked shut. However, this safety interlock can be intentionally defeated if the crane latch is depressed and the hammer is then cocked with the cylinder opened. If the cylinder is then shut when the hammer is cocked, the hammer may fall and the firearm may fire.

NEVER CLOSE OR OPEN THE CYLINDER WHILE THE HAMMER IS COCKED

3. The revolver is now ready to fire, either “double action” by pulling the trigger through its complete arc for each shot, or “single action” by cocking the hammer and then pulling the trigger for each shot. The trigger pull is somewhat shorter and lighter when the revolver is fired single action, and this is the preferred mode for precise shots or target shooting.

4. DO NOT TOUCH THE TRIGGER UNTIL YOU ARE READY TO FIRE.

5. DO NOT HOLD THE REVOLVER BY THE BARREL OR CYLINDER WHEN FIRING.

⚠ CAUTION–DOUBLE ACTION FIRING

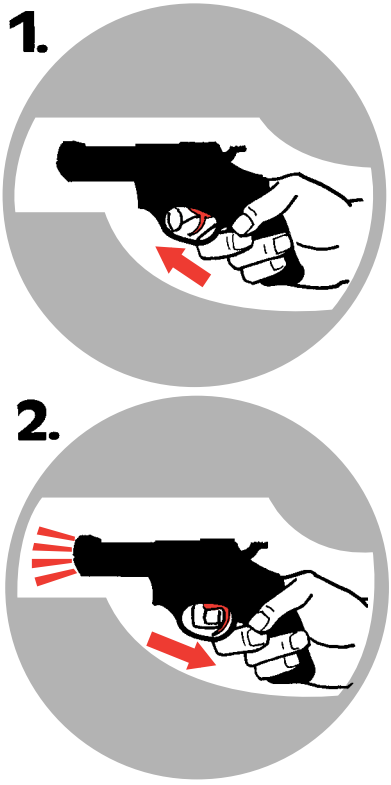

When firing in the double action mode, be sure that the trigger is released completely to its fully forward position before pulling the trigger for a subsequent shot. If the trigger finger is allowed to interfere with the full recovery of the trigger (preventing it from moving through about the last one-eighth inch of its forward movement), the trigger cannot be pulled again for another discharge. The trigger must be fully released after each shot is fired. This characteristic is found in all modern double action revolvers and “double action only” pistols.

FULLY RELEASE TRIGGER BETWEEN SHOTS

WARNING–FIRING

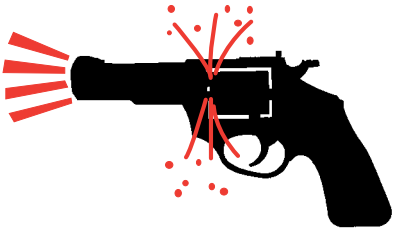

When firing the Super Redhawk® revolver, be sure all persons are a safe distance to the rear of the shooter. When fired, all revolvers discharge hot gas and particles of lead, powder grains, or lubricant through the clearance gap between the cylinder and the rear of the barrel at high speed. This can injure a person who is standing too close to the revolver.

When firing the Super Redhawk® revolver (or any revolver), always be certain that nothing – including your hands and fingers – are in the path of the hot gas and particles which are discharged from the front and sides of the cylinder.

When shooting, adequate eye protection is essential. Shooters and bystanders must wear shooting glasses. Hearing protection must also be worn. Exposure to shooting noise can damage hearing.

HOT GASES EXIT BARREL/CYLINDER GAP

TO UNCOCK (DECOCK) THE REVOLVER

If your revolver is cocked, and you wish to let the hammer down to its forward position (against the frame), proceed as follows: USE EXTREME CARE WHEN ATTEMPTING TO DECOCK THE REVOLVER, AS THE THUMB SLIPPING DURING THIS PROCESS CAN RESULT IN AN ACCIDENTAL DISCHARGE IF THE TRIGGER IS HELD TO THE REAR.

1. Make certain that the revolver is pointed in a safe direction (see Rule 2, page 38).
2. Make certain both hands are dry and not impeded in any way due to gloves, bandages, cold, etc.
3. Grasp the revolver (if right-handed) so that the thumb and forefinger of your left hand are firmly holding the frame below the middle of the cylinder (see Figure 5A, Page 19). Your left hand (if right-handed) should support the full weight of the revolver, allowing you to use your right hand to manipulate the hammer and trigger as outlined below.
4. Place your right thumb firmly on the hammer spur and, with your thumb securely in control of the hammer, squeeze the trigger only enough to permit the hammer to ‘break free’ of the trigger. At that instant, IMMEDIATELY RELEASE THE TRIGGER and then slowly permit the hammer, STILL SECURE UNDER YOUR THUMB, to move fully forward to its resting position against the frame.

NOTE: It is imperative that finger pressure be removed from the trigger just as soon as it is free of the hammer. Then, properly, the trigger and hammer will move towards their fully forward rest positions together (see Figure 5B, below).

Practice this important firearm handling skill with an unloaded revolver until you have developed the proper control and 'touch' to decock your revolver safely. The key to safe decocking is having the weight of the revolver controlled with one hand, while the thumb and forefinger of the 'shooting hand' control the hammer and trigger. Improperly restraining the trigger during this procedure may result in the hammer not resting fully against the frame. If this should occur, carefully repeat the procedure for decocking, steps 1–4 again.

UNCOCKING THE REVOLVER

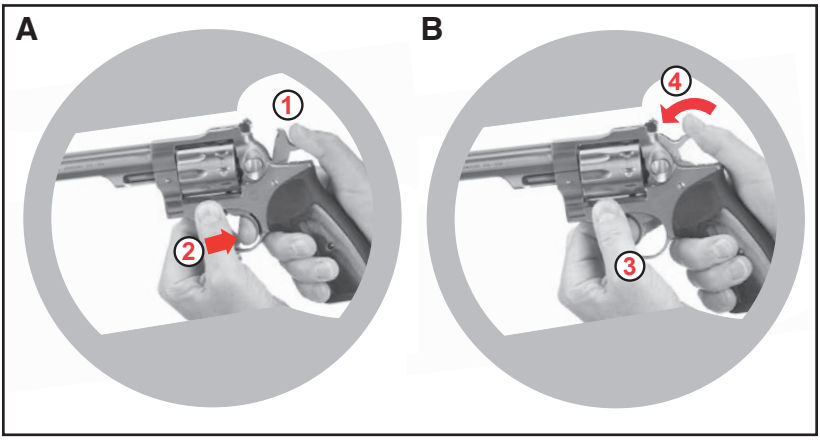

Figure 5

A. With the thumb controlling the hammer as shown (1), squeeze trigger to permit hammer to 'break free' (2).

B. When hammer is free, IMMEDIATELY release trigger (3). Then lower hammer slowly to its resting position completely down against frame (4).

SPECIAL INSTRUCTIONS FOR 10MM AUTO MOON CLIPS

10MM AUTO Super Redhawk® revolvers require special moon clips to extract the cartridges using the ejector rod because this type of cartridge has no rim for the ejector to act against. The revolver can be fired without the moon clips, however, extraction will be more difficult.

TO LOAD MOON CLIP:

Hold the moon clip on the outside diameter in one hand. Using the thumb and forefinger of the opposite hand, press the cartridge's extractor groove into the moon clip until it snaps into place (see Figure 6). Repeat this process until the moon clip is fully loaded. Load the cartridges, along with the moon clip, into the cylinder (see Figure 7).

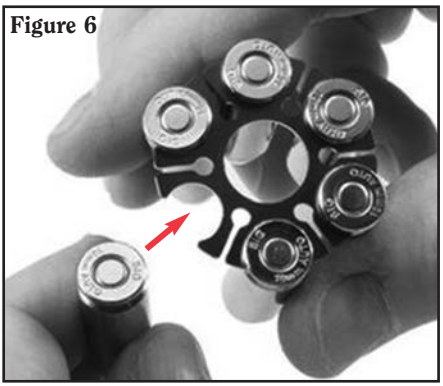
Figure 6

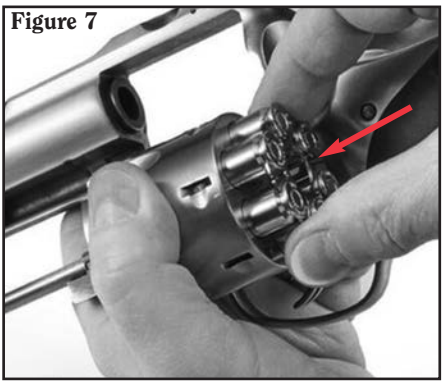
Figure 7

TO UNLOAD MOON CLIP:

Eject the moon clip and cases from the cylinder (see Figure 8). While holding the moon clip on the outside diameter, pull the empty cases out of the moon clip (see Figure 9). The moon clip is now ready to be reloaded. Inspect the moon clip after each use. If broken, bent or cracked, discard and replace the moon clip. Additional moon clips can be purchased from our Newport, New Hampshire Service Department.

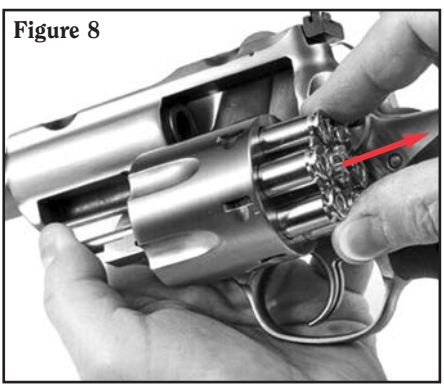
Figure 8

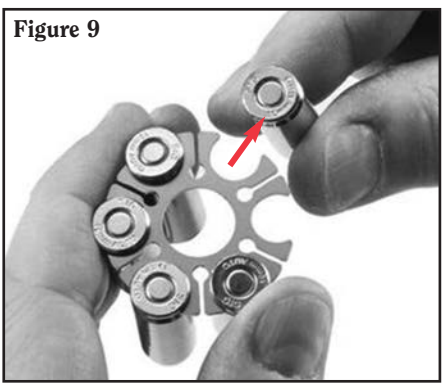
Figure 9

TO UNLOAD OR EJECT CARTRIDGE CASES

KEEP THE REVOLVER POINTED IN A SAFE DIRECTION!
DO NOT ATTEMPT TO UNLOAD WHEN THE HAMMER IS COCKED.

1. Uncock the revolver (see pages 18 - 19).
2. Press crane latch. Guide cylinder out left of frame as for loading. The revolver now cannot be fired.
3. Push head of ejector rod smartly toward rear of cylinder until it stops. This action will extract cartridges or fired cases. Do not eject live cartridges onto any surface where a primer might strike a solid object and discharge the cartridge.
4. Check to be sure all chambers are empty.

NOTE: When ejecting fired cartridge cases, position the revolver at a high angle so the cases will come fully out of the chambers and not slip under the ejector. This high angle positioning is not necessary when ejecting unfired cartridges.

CORRECT UNLOADING SEQUENCE

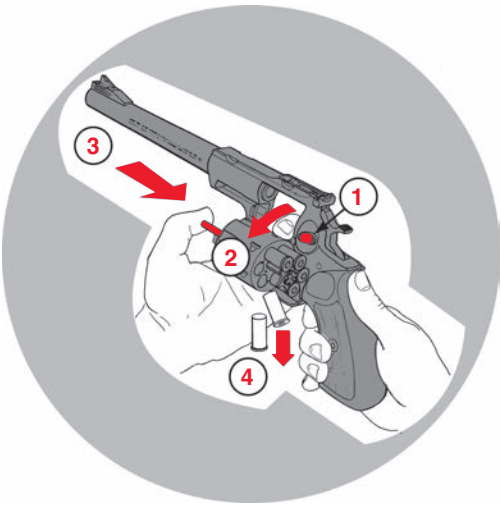

WARNING – DISASSEMBLY

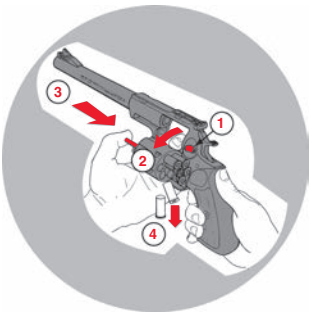

Always unload a firearm before cleaning, lubrication, disassembly, or assembly.
Never remove or install a loaded cylinder – it can fire if dropped or struck.

UNLOAD BEFORE CLEANING

DISASSEMBLY

READ INSTRUCTIONS BEFORE DISASSEMBLING A FIREARM.

An on-line video demonstrating the disassembly and reassembly of the double-action revolvers can be viewed by going to **Ruger.com/TechTips**.

1. BE CERTAIN THE REVOLVER IS UNLOADED BEFORE DISASSEMBLY.

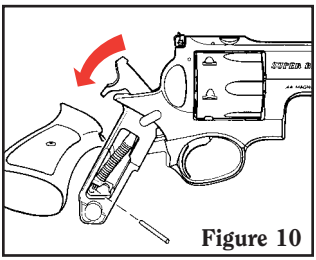

Figure 10

2. Using a properly fitting screwdriver, remove the grip screw. Remove the pistol grip inserts from the grips. The grip panel locator may then be removed. Pull the grip downward off the frame.

3. Cock the hammer. Insert an appropriately-sized pin (or similar instrument) about one half its length into the hole at the rear of the mainspring strut. (See Figure 10.)

4. With your thumb on the hammer spur, squeeze the trigger allowing the hammer to go fully forward. Lift out the mainspring assembly. CAUTION: Do not remove the disassembly pin until the mainspring assembly is reinstalled in the revolver at the time of reassembly. Doing so will permit the mainspring to fly off its strut with great force and may cause injury.

5. Hold the trigger in the rearward position and ***lightly*** strike the pivot pin to release it from the frame. Lift the hammer out of the top of the frame while the trigger is held in a rearward position (see Figure 11).

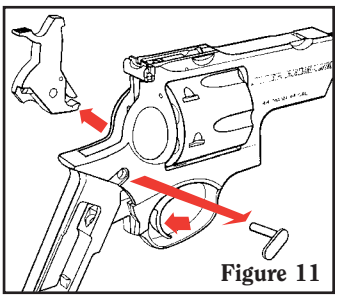

Figure 11

6. Use a screwdriver of appropriate size and insert it through the hole in the frame to depress the trigger guard lock plunger located inside the frame at the rear of the trigger guard. Simultaneously pull down and remove the trigger guard assembly (see Figures 12 & 13). It may be necessary to slightly depress the trigger while removing the trigger guard assembly.

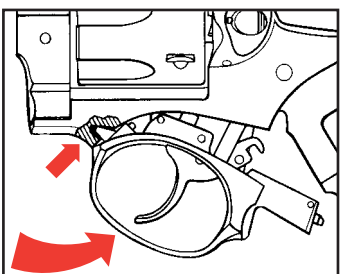

Figure 12

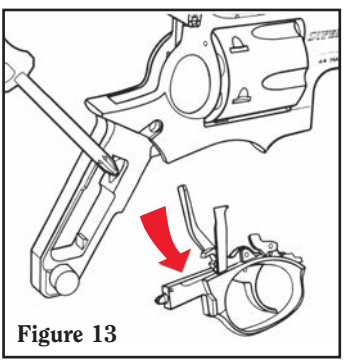

Figure 13

7. Cradle the revolver frame in your left hand and with the thumb of your right hand press the cylinder latch button, swing out the cylinder assembly and remove it forward from the frame.

8. Further disassembly is not essential for normal cleaning purposes. Any further disassembly should only be undertaken by factory service personnel.

REASSEMBLY

AGAIN, BE CERTAIN REVOLVER IS UNLOADED!

Before starting reassembly, be certain that all components and the inside of the frame are thoroughly clean. In particular the tongue on the front of the trigger guard and its mating recess in the frame must be completely clean.

1. Replace the cylinder and crane assembly in the frame and close the cylinder.

2. Hook the front of trigger guard into the recess in the frame (see Figure 12, p. 22). Align the pawl in its recess in the frame and be sure the transfer bar is in the correct position in the rear of firing pin. Swing the trigger guard upward into position in the frame then allow the latch to re-engage. If solid resistance is felt when swinging the trigger guard into the frame, or if the trigger guard will not lock into position, re-check the position of the pawl and the transfer bar (see Figure 14).

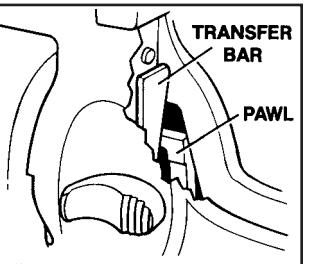

Figure 14

NOTE: *At this point in reassembly the trigger should function to rotate and lock the cylinder. Pull the trigger a few times, to check proper functioning, as always with the revolver pointed in a safe direction.*

3. Hold the trigger in its rearward position and insert the hammer into the frame. Install the hammer pivot. Release the trigger and permit the hammer to go fully forward.

4. With the hammer forward, insert the mainspring assembly into the frame. Position the two ends of the notch in the mainspring seat onto the matching projections of the grip frame. (**NOTE:** The large notch in the mainspring seat should be forward to allow clearance for the grip screw.) Hold the mainspring assembly in position and cock the hammer. It may be necessary to move the mainspring assembly a little to properly position the upper end of the mainspring strut to rest in recess in the hammer. When the hammer is cocked, the pin can be removed (it will fall free).

5. Squeeze the trigger and ease the hammer down. Push the grip upward onto the frame, install the grip panel locator and place the pistol inserts into position. Install and tighten the grip panel screw.

6. Open and close the cylinder. Dry fire the revolver in both single action and double action to be certain that all parts are working properly.

CHECK YOUR REVOLVER'S FUNCTION

AGAIN, BE CERTAIN REVOLVER IS UNLOADED!

Periodic inspection of any firearm is important to ensuring its safe operation. It is important to clean and inspect your firearm after each range session or whenever the firearm has been exposed to sand, dust, moisture, humidity, or other adverse conditions. Proper maintenance increases the longevity of your firearm and will allow early detection of worn or broken parts.

Prior to each use, visually inspect the firearm to ensure no components are damaged, missing, loose, bent, cracked, chipped, or peened. If you observe excessive wear, you should stop using your revolver and contact customer service or a trained, certified gunsmith to evaluate its condition and replace any worn parts, if necessary.

After reassembly and as part of the regular periodic inspection of your revolver, please perform the following function checks to ensure the revolver is functioning properly.

FIRST, BE SURE THAT EVERY CHAMBER OF THE CYLINDER IS UNLOADED AND ALWAYS KEEP THE REVOLVER POINTED IN A SAFE DIRECTION!

a. Open the cylinder by pressing the crane latch and guide the cylinder out of the cylinder frame. Rotate the cylinder. The cylinder should spin freely without binding.

b. With the cylinder open, attempt to rotate ("cock") the hammer. You should not be able to cock the hammer.

c. Close the cylinder by guiding the cylinder into the cylinder frame and then cock the hammer. The hammer should remain cocked, fully to the rear, and the cylinder should rotate without you feeling any unusual drag or require more force than normal.

d. With the hammer cocked, attempt to open the cylinder. It should not open.

e. Making sure the firearm is completely unloaded and pointed in a safe direction, dry fire the firearm several times in both single action and double action modes. The hammer should fall completely each time it is dry fired.

If any of the above function checks fail or if you are uncertain, please consult a competent gunsmith or contact Ruger Customer Service at 336-949-5200 for further firearm inspection before using the firearm.

CARE AND CLEANING

ALWAYS BE CERTAIN THE REVOLVER IS UNLOADED BEFORE CLEANING.

The internal mechanism of the Super Redhawk revolver can be lubricated without disassembly. A few drops of light oil recommended as suitable for firearms, applied periodically about the various frame openings, will work its way into the mechanism parts. The exterior of the revolver and the bore and chambers should be thoroughly cleaned and then wiped with an oily cloth if the firearm is to be stored. Do not apply excess lubrication.

An on-line video demonstrating the proper cleaning procedure of the double-action revolvers can be viewed by going to **Ruger.com/TechTips**.

To clean the revolver after firing, swing the cylinder out and clean the barrel from the muzzle by running a cleaning rod with a solvent coated patch through the bore several times. A bronze wire brush (of correct size for firearm caliber) attached to the cleaning rod should then be pushed the full length of the bore several times. Again swab the bore with a solvent coated patch. Then wipe the rod clean and, using a dry patch, swab the bore until it is clean. Examine the bore to be sure that no fouling remains. Repeat the above procedure for each of the six chambers.

WARNING – LUBRICATION

Firing a revolver with oil, grease, or any other material even partially obstructing the bore may result in damage to the revolver and serious injury to the shooter and those nearby.

Do not spray or apply lubricants directly on ammunition. If the powder charge of a cartridge is affected by the lubricant, it may not be ignited, but the energy from the primer may be sufficient to push the bullet into the bore where it may become lodged. Firing a subsequent bullet into the obstructed bore may damage the revolver and cause serious injury or death to the shooter and those nearby. Use lubricants properly. You are responsible for the proper care and maintenance of your firearms.

IMPROPER LUBRICATION DESTROYS FIREARMS

EJECTOR CLEANING INSTRUCTIONS

Chambers must be thoroughly scrubbed to remove build-up of bullet metal and firing residue. A dirty chamber can prevent full seating of a cartridge, which in turn causes the cylinder to bind.

DO NOT APPLY EXCESSIVE OIL TO UNDERSIDE OF EJECTOR – AREA SHOULD BE WIPED DRY WITH OILY CLOTH.

If lead bullet loads are fired extensively, lead build-up may cause cylinder binding. Lubricate the cylinder crane gap with Break-Free® CLP or some other lubrication which meets mil. spec. Mil-1-63460 to prevent this condition.

If you shoot excessive amounts of ammo or use a typically dirty ammo, clean under the ejector after every use.

NOTE: The underside of the ejector ('star') and the area of the cylinder where the ejector seats must be cleaned (See Figure 15). Dirt can prevent the ejector from fully seating. That condition can cause hard closing of the cylinder and interfere with proper cylinder rotation.

Figure 15

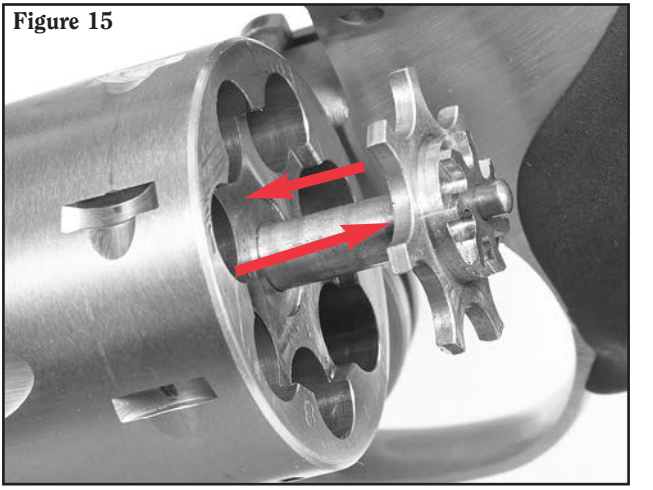

CARE OF STAINLESS STEEL REVOLVERS

Revolvers made of stainless steel are more resistant to corrosion than blued steel revolvers. However, in the interest of proper operation and long life of your revolver, inspect it frequently and clean, lubricate and apply an appropriate rust preventative.

Sometimes surface discoloration may be noted, particularly in the grip area of stainless steel revolvers, resulting from perspiration. Contact with some types of holsters can also cause stains or rusting. Rusting may also occur as a result of the revolver being exposed to moisture, humidity, salt air or chemicals.

Minor discoloration can usually be removed by rubbing the stained area with an abrasive ink eraser, crocus cloth, or a “metal polishing” compound. When using any of these abrasives, proceed with care and use light pressure to achieve a blending of ‘color’ with those areas that are not discolored.

External surfaces of the barrel, frame and cylinder should be cleaned and wiped dry after use or after exposure to adverse conditions. If the revolver is to be stored, coat it with a light film of oil or preservative. Where the revolver is in continuing use, and the presence of oil or grease would be objectionable, then the external surfaces can be coated (after cleaning and drying) with a paste wax formulated for use on metals. Apply the wax sparingly, allow time for it to dry hard, then buff lightly with a soft cloth. When applying the wax, take care that it does not get into the mechanism or on the functioning parts such as the hammer, trigger, crane latch, etc. A properly applied hard wax coating will not interfere with firearm handling, and it will provide a measure of protection.

ATTACHING RUGER SCOPE RINGS

Each Ruger scope ring is a mated assembly of a top and a base. Do not mix the parts of the two ring assemblies as they are not interchangeable. On the underside of each mounting ring assembly there is an integral lug, located off center with respect to the front and back sides of the mount. The lug is nearer to the front surface. By reference to the lug, the mounting ring can be correctly assembled with the front of the ring toward the muzzle of the revolver.

1. Disassemble one ring and reassemble over the scope body between the turret and the eyepiece. (**NOTE:** High ring goes on front mount. Low ring on rear mount.)
2. Install the four top screws. Do not tighten.
3. Disassemble the other ring and install it on the forward section of the scope tube with the lug forwardly also. Install the four top screws. Again, do not tighten.
4. Assemble the rings to the frame with the lugs engaging the recesses in the top surface of the receiver. Tighten the clamp nuts so that the rings are locked to the semi-circular cuts on the sides of the frame.
5. Rotate the scope until cross-hairs are aligned properly, and slide the scope to desired eye relief. Then tighten the eight top screws each a bit at a time to grip the scope body.
6. Sight in according to the directions with your scope.

SIGHTS

The Super Redhawk® revolver is provided with an insert front sight. To change the front sight, depress the spring-loaded plunger in the front of the barrel rib with a small punch and lift rear of sight blade. The adjustable rear sight has a white outline blade. Each click of the rear sight adjustment screws (either windage or elevation) will move the point of impact of the bullet approximately 3/4" at a distance of 25 yards. Move the rear sight in the direction you desire the bullet to move on the target. The suggested sight picture is shown below. See "Attaching Ruger Scope Rings," p. 27.

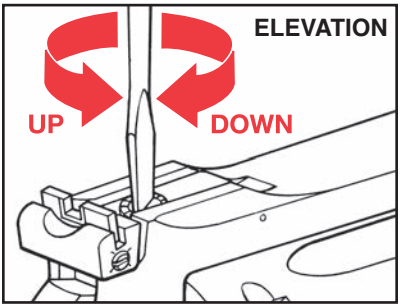

To raise point of impact: turn screw counterclockwise.

To lower point of impact: turn screw clockwise.

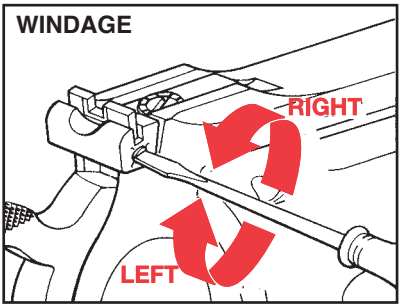

To move the point of impact to the right: turn screw counterclockwise.

To move the point of impact to the left: turn screw clockwise.

SUGGESTED SIGHT PICTURE

Top of front sight even with top of rear sight blade.
Front sight centered in notch of rear sight blade. Target bull's-eye centered on top of front sight.

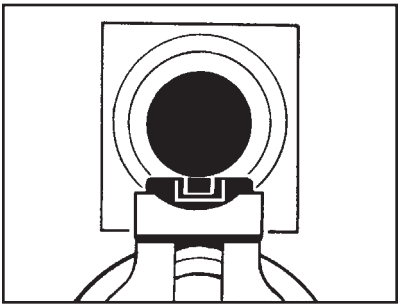

STORAGE

GUNS SHOULD NOT BE STORED LOADED!

USE THE LOCKING DEVICE SUPPLIED WITH THE REVOLVER TO RENDER IT INOPERATIVE FOR SAFE STORAGE.

(SEE PAGE 10)

Do not keep the revolver in a leather, fabric or canvas holster when it is stored. These materials attract moisture, even though the holster may appear to be perfectly dry.

WARNING – STORAGE

- Never place or store any firearm in such a manner that it may be dislodged. Firearms should always be stored securely and unloaded, away from children and careless adults.
- Use the locking device supplied with the revolver for storage. The use of a locking device or safety lock is only one aspect of responsible firearms storage.
- For increased safety, firearms should be stored unloaded in a location that is both separate from their ammunition and inaccessible to children and any other unauthorized person.

STORE SECURELY & UNLOADED

SERVICE AND PARTS POLICY

If you have any questions with regard to the performance of your RUGER® SUPER REDHAWK® revolver please contact our Customer Service online at **Ruger.com** or call the Customer Service Dept. at 336-949-5200. Fully describe all circumstances and conditions involved. If you should need to return your revolver to the factory for repair, or order parts for it, please comply with the following suggestions for prompt service:

WARNING: BEFORE SHIPPING ANY FIREARM, BE ABSOLUTELY CERTAIN THAT IT IS UNLOADED. DO NOT SHIP CARTRIDGES WITH A FIREARM.

SHIPPING FIREARMS FOR REPAIR

NOTE: You must obtain a **Repair Authorization Number** before returning your firearm. An authorization number can be obtained by contacting Customer Service online at **Ruger.com** or calling the Customer Service Dept. at 336-949-5200. Firearms should be sent prepaid. We will not accept collect shipments. RUGER® SUPER REDHAWK® revolvers returned to the factory for repair should be sent to: Sturm, Ruger & Company, Inc., Customer Service Department, 411 Sunapee St., Newport, NH 03773.

The Federal Gun Control Act, as well as the laws of most states and localities, do not prohibit an individual (who is not otherwise barred from purchasing or possessing a firearm) from shipping a firearm directly to the manufacturer for repair. However, before you ship your firearm to us, be certain that your state or locality does not have a law or regulation that will prohibit you from receiving the firearm from us after repair. If such receipt is prohibited, please have a federally licensed firearms dealer ship the firearm to us. If your firearm is sent to us by a dealer, it will be returned to that dealer after being repaired. If a handgun (pistol or revolver) is shipped by an individual who does not hold a Federal Firearms License, it must be shipped for overnight delivery via U.P.S., Federal Express, or other, similar private overnight service. **NOTE:** Persons who do not hold a Federal Firearms License are prohibited by Federal law from shipping a handgun by U.S. Mail. Handguns mailed in violation of the law may be impounded or confiscated by the Post Office and the non-FFL may be subject to prosecution.

Please do not include holster, grip panels, or other accessories with a firearm being shipped to the factory for service. **DO NOT SEND FIREARM BOXES OR LITERATURE THAT YOU CONSIDER TO BE COLLECTOR'S ITEMS – THESE ARE INVARIABLY DAMAGED OR DESTROYED IN SHIPMENT.** Always insure your shipment.

Enclose a letter that includes your name, address, telephone number, firearm serial number and model, and repair authorization number. Describe in detail the trouble you have experienced with your firearm, or the work you wish to have done. Merely stating that the firearm "needs repair" is inadequate information. Please include copies of any previous correspondence.

All work performed is subject to a minimum labor charge and charges for shipping and handling. Most models can be refinished, but custom gunsmithing service or nonstandard alterations are NOT AVAILABLE from Ruger Customer Service Departments. Please contact the Customer Service Department for pricing information.

⚠ WARNING – PARTS PURCHASERS

- It is the purchaser's responsibility to be absolutely certain that any parts ordered from the factory are correctly fitted and installed.
- Firearms are complicated mechanisms and IMPROPER FITTING OF PARTS MAY RESULT IN A DANGEROUS MALFUNCTION, DAMAGE TO THE FIREARM, AND SERIOUS INJURY TO THE SHOOTER AND OTHER PERSONS.
- The purchaser and installer of parts must accept full responsibility for the correct adjustment and functioning of the firearm after such installation.

PARTS MUST FIT CORRECTLY

ORDERING PARTS

Please contact our Customer Service Department at 336-949-5200 for parts availability and current prices or use our Online Support Request located at **Ruger.com/dataProcess/customerService** to request assistance with your firearm.

We cannot comply with open account or C.O.D. requests. Payment in full via credit card (Visa or MasterCard only), money order, or certified bank check (no personal checks or cash, please) is required before any service will be performed. Please provide your credit card number, your name as it appears on the credit card, the expiration date, and 3-digit security code. All parts orders are subject to a minimum charge and charges for shipping and handling. Order parts by ***Part Name and specify the model and entire serial number*** of the firearm for which the parts are being ordered. There is a minimum labor charge plus a shipping and handling charge if the parts are factory fit. All factory fit parts are fit on an exchange basis only. We will not return the replaced parts. Please contact the Customer Service Department for pricing information.

Barrels, cylinders, cylinder/crane assemblies and a number of other component parts must be fitted at the factory. Company policy is to proof-test and/or function fire all barrels after fitting to the receivers in which they are to be used. This procedure ensures maximum protection to our customers. The special proof-test ammunition used in this testing is sold only to bonafide firearms manufacturers and is not available to gun shops, gunsmiths, or individuals.

Because it is a serial numbered part, the frame of the RUGER® SUPER REDHAWK® revolver is defined as a 'firearm' by Federal Law and is not offered for sale as a component part.

*Parts designated by an asterisk must be factory fit. These parts are fit on an exchange basis only. We will not return the replaced parts. We will not return any part that is broken, malfunctioning, badly worn or has been modified. See "Warning – Parts Purchasers," above.

⚠ WARNING: A firearm containing broken, malfunctioning, or badly worn parts should not be fired.

RUGER® SUPER REDHAWK®

PARTS LIST

Design, prices and specifications subject to change without notice.

SPECIFY MODEL, CALIBER & SERIAL NO. WHEN ORDERING

(See Exploded View on Page 34.)

	Key	Part Name
*	1	Hammer Assembly
	2	Hammer Pivot Pin Assembly
	3	Hammer Dog Spring
	4	Hammer Dog Plunger
*	5	Hammer Dog
	6	Hammer Dog Pivot Pin
	7	Hammer Strut
	8	Hammer Strut Mainspring
	9	Hammer Strut Seat
*	10	Trigger Assembly
	11	Trigger Plunger
	12	Pawl Plunger Spring
	13	Pawl Plunger
*	14	Pawl
	15	Trigger Link
	16	Trigger Link Pin
	17	Transfer Bar
*	18	Trigger Guard
*	19	Crane Pivot Lock Plunger
*	20	Crane Pivot Lock Spring
	21	Cylinder Latch Pivot
	22	Cylinder Latch Spring
	23	Cylinder Latch Plunger
	24	Trigger Pivot Pin
	25	Trigger Link Plunger
	26	Trigger Guard Latch Spring
	27	Trigger Guard Latch
	28	Trigger Guard Latch Pin
	29	Cylinder Latch
*	30	Ejector Retainer
	31	Ejector Spring
	32	Center Pin Spring
	33	Center Pin Rod
	34	Center Pin
*	35	Cylinder Assembly

* Parts so marked must be factory fit.

Key	Part Name
* 36	Ejector
* 37	Crane & Crane Pivot Assembly
* 38	Cylinder Retaining Ball, 2 Req'd
39	Front Latch
40	Front Latch Pivot Pin
41	Front Latch Pivot Lock Spring
42	Front Latch Pivot Lock
43	Front Latch Spring
44	Front Latch Spring Plunger
45	Ejector Rod
* 46	Recoil Plate
* 47	Firing Pin Rebound Spring
* 48	Firing Pin
49	Crane Latch Spring
50	Crane Latch Plunger
* 51	Crane Latch
* 52	Crane Latch Pivot
53	Recoil Plate Cross Pin
* 54	Barrel
55	Front Sight
56	Front Sight Screws, 3 Req'd
57	Rear Sight Assembly
	Includes Key Nos. 58 - 64
58	Rear Sight Elevation Spring, 2 Req'd
59	Rear Sight Base
60	Rear Sight Pivot Pin
61	Rear Sight Elevation Screw
62	Rear Sight Windage Spring
63	Rear Sight Blade
64	Rear Sight Windage Adjustment Screw
65	Hogue® Rubber Monogrip
	Includes Key Nos. 65a - 65c
65a	Grip Pin
65b	Grip Saddle
65c	Grip Screw
66	Scope Ring Assembly
	Includes Key Nos. 66a - 66c
66a	Scope Ring Clamp
66b	Scope Ring Nut
66c	Torx® Head Screws, 8 Req'd
	Torx® Key Wrench,
	Not Illustrated (for Torx® Head Screw)
	Disassembly Pin, Not Illustrated

* Parts so marked must be factory fit.

SUPER REDHAWK®
EXPLODED VIEW

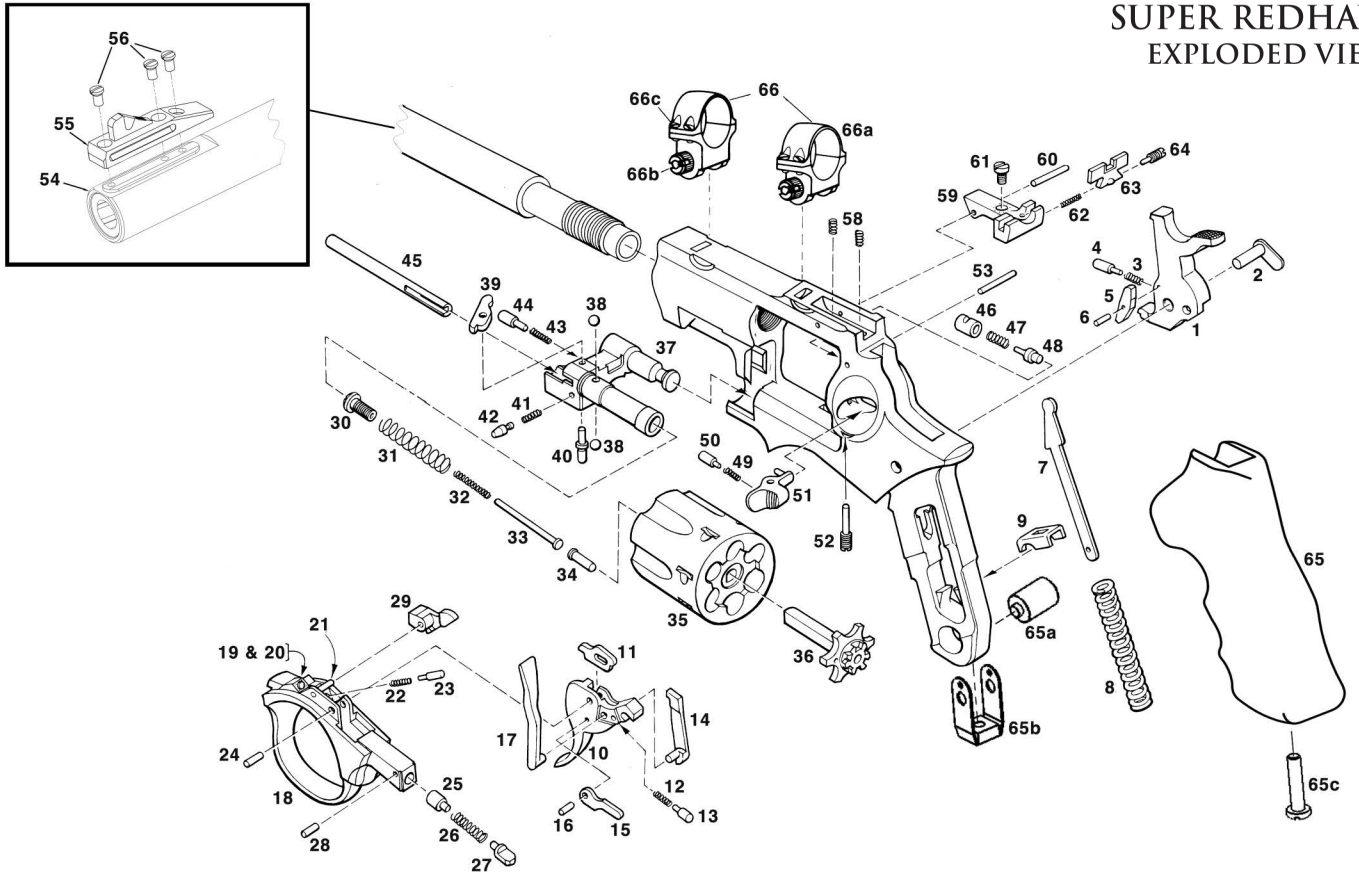

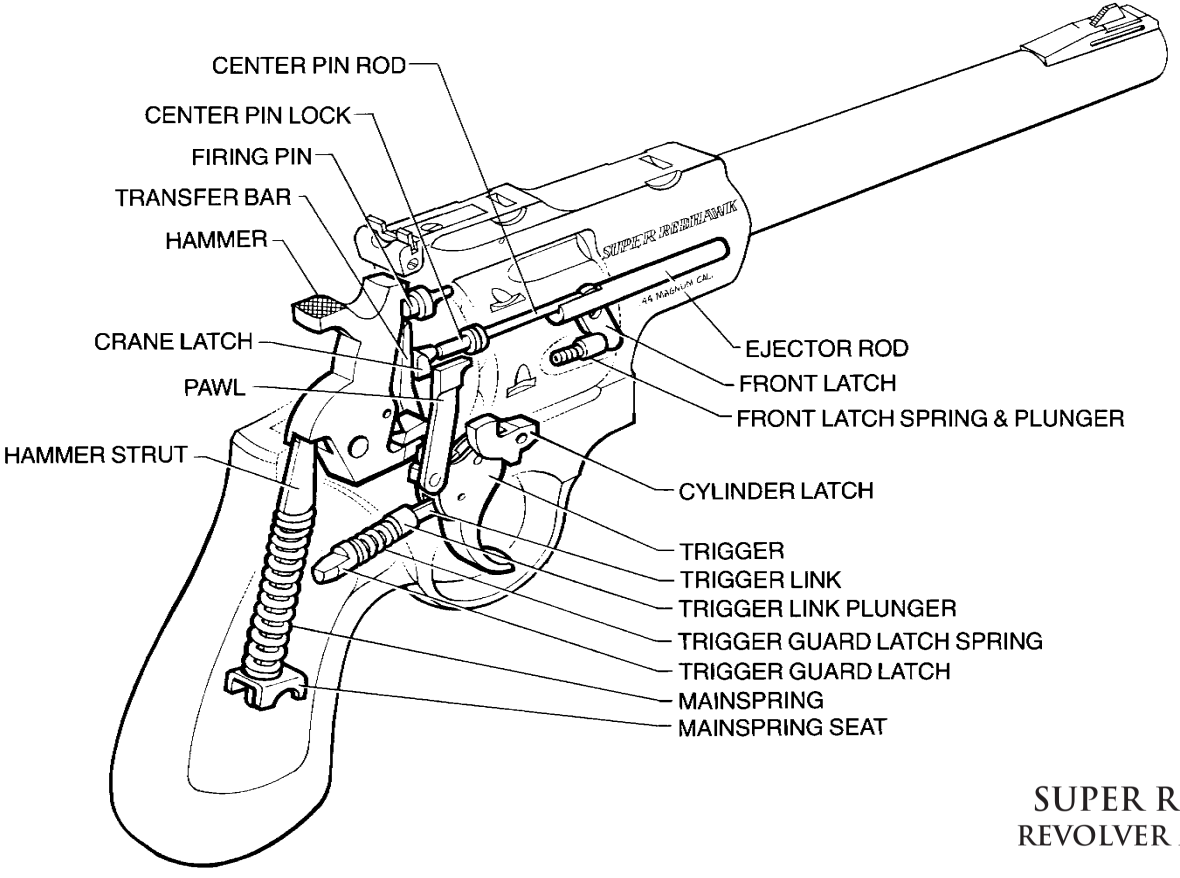

SUPER REDHAWK®
REVOLVER MECHANISM

SUPER REDHAWK® ALASKAN™
SUPPLEMENTAL PARTS LIST & EXPLODED VIEW

See Pages 32 - 34
For All Other Parts Lists and Exploded View Drawings

Key No.		Part Name
	1	Frame/Barrel Assembly
	2	Front Sight
*	3	Trigger Guard
*	4	Trigger
	5	Front Sight Cross Pin
	6	One Piece Rubber Hogue® Grip
		(Includes Key Nos. 6a, 6b & 6c)
	6a	Grip Pin
	6b	Grip Saddle
	6c	Grip Screw

* Parts so marked must be factory fit.

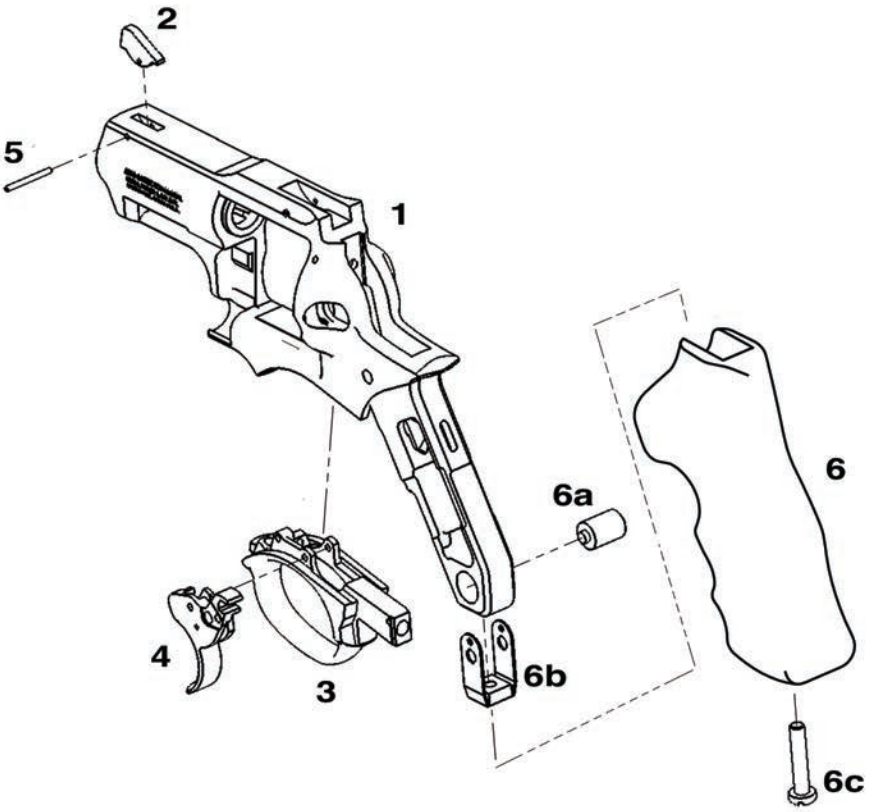

SUPER REDHAWK® 10MM AUTO
SUPPLEMENTAL PARTS LIST & EXPLODED VIEW

See Pages 32 - 34
For All Other Parts Lists and Exploded View Drawings

Key	Part Name
† 1	Frame
* 2	Cylinder, 10MM AUTO
* 3	Barrel
4	Ejector
5	Moon Clip
6	Rubber Grip
7	Grip Panel Locator
8	Wood Inserts, Pair
9	Grip Screw

† The frame of the revolver is defined as a 'firearm' by Federal Law and is not offered for sale as a component part.

* Parts so marked must be factory fit.

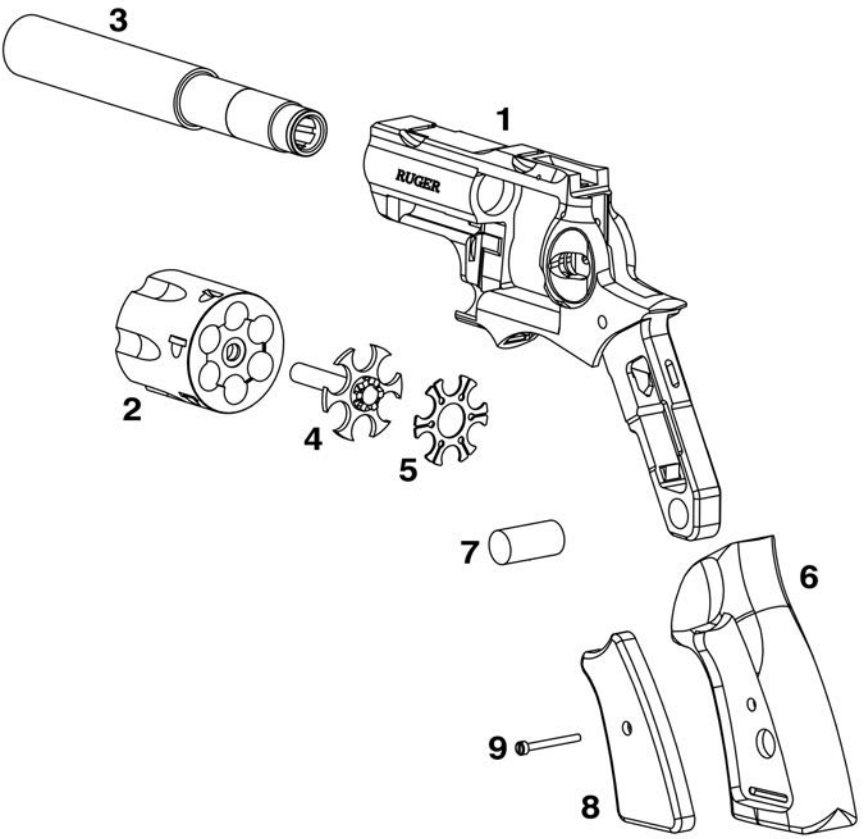

THE BASIC RULES OF SAFE FIREARMS HANDLING

We believe that Americans have a right to purchase and use firearms for lawful purposes. The private ownership of firearms in America is traditional, but that ownership imposes the responsibility on firearm owners to use their firearms in a way that will ensure their own safety and that of others. When firearms are used in a safe and responsible manner, they are a great source of pleasure and satisfaction, and represent a fundamental part of our personal liberty.

Firearms do not cause accidents! Firearms accidents are almost always found to have been the result of carelessness or ignorance on the part of the shooter of the basic rules of safe firearm handling.

The following rules must be observed by firearm users at all times. Safe firearm handling is not just desirable, it is absolutely essential to your safety, the safety of others, and the continuation of firearm ownership and sport shooting as we know it today.

1. LEARN THE MECHANICAL AND HANDLING CHARACTERISTICS OF THE FIREARM YOU ARE USING.

Not all firearms are the same. The method of carrying and handling firearms varies in accordance with the mechanical provisions for avoiding accidental discharge and the various proper procedures for loading and unloading. No one should handle any firearm without first having thoroughly familiarized themselves with the particular type of firearm they are using, and with safe firearm handling in general.

2. ALWAYS KEEP THE MUZZLE POINTED IN A SAFE DIRECTION.

Be sure of the bullet stop behind your target, even when dry-firing. Never let the muzzle of a firearm point at any part of your body or at another person. This is particularly important when loading or unloading a firearm. In the event of an accidental discharge, no injury can occur as long as the muzzle is pointing in a safe direction. A safe direction means a direction that will not permit a discharged bullet to strike a person, or to strike an object from which the bullet may ricochet.

A safe direction must take into account the fact that a bullet may penetrate a wall, ceiling, floor, window, etc., and strike a person or damage property. Make it a habit to know exactly where the muzzle of your firearm is pointing whenever you handle it, and be sure that you are always in control of the direction in which the muzzle is pointing, even if you fall or stumble. Keep your finger off the trigger until you are ready to shoot.

3. FIREARMS SHOULD BE UNLOADED WHEN NOT IN USE.

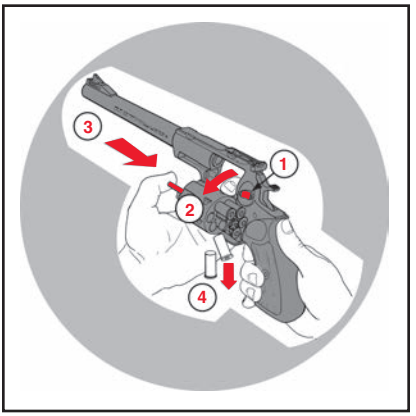

Firearms should be loaded only when you are in the field or on the target range or shooting area, ready to shoot. Firearms and ammunition should be securely locked in safes, racks or cabinets, or by using the locking device supplied with the firearm, when not in use. Ammunition should safely be stored separate from firearms. Store your firearms out of sight of visitors and children. It is the firearm owner's responsibility to be certain that children and persons unfamiliar with firearms cannot gain access to firearms, ammunition, or components.

4. BE SURE THE BARREL IS CLEAR OF OBSTRUCTIONS BEFORE SHOOTING.

Even a bit of mud, snow or excess lubricating oil or grease in the bore may cause the barrel to bulge, or even burst on firing, and can cause serious injury to the shooter and bystanders. Be sure that you are using ammunition of the proper caliber and loading for the firearm you are using. If the report or recoil on firing seems weak, or doesn't seem quite right, CEASE FIRING IMMEDIATELY, unload your firearm, and check to be sure that no obstruction has become lodged in the barrel. Never try to shoot out an obstruction!

5. BE SURE OF YOUR TARGET BEFORE YOU SHOOT.

Don't shoot unless you know exactly where your bullet is going to strike. Be sure of the bullet stop behind your target, even when dry-firing with an unloaded firearm. If you are in the field hunting, do not fire at a movement or noise. Take the time to be absolutely certain of your target before you pull the trigger.

6. WEAR SHOOTING GLASSES AND HEARING PROTECTION WHEN YOU SHOOT.

All shooters should wear protective shooting glasses and adequate hearing protection when shooting. Exposure to shooting noise can damage hearing, and wearing adequate eye protection when shooting is essential.

7. NEVER CLIMB A TREE OR FENCE WITH A LOADED FIREARM.

Put the firearm down carefully before climbing a fence, and unload it before climbing or descending a tree or jumping over a ditch or other obstruction. Never pull or push a loaded firearm toward yourself or another person. When in doubt, or whenever you are about to do anything awkward, unload your firearm!

8. DON'T SHOOT AT A HARD SURFACE OR AT WATER.

Bullets can glance off many surfaces like rocks or the surface of water and travel in unpredictable directions with considerable velocity.

9. NEVER TRANSPORT A LOADED FIREARM.

Firearms should always be unloaded before being moved or placed in a vehicle. A suitable carrying case or scabbard should be used to carry an unloaded firearm to and from the shooting area.

10. AVOID ALCOHOLIC BEVERAGES WHEN SHOOTING.

Don't drink until the day's shooting is over. Handling firearms while under the influence of alcohol in any form, or medications that could affect your judgement or coordination, constitutes a criminal disregard for the safety of others.

A BRIEF ACCOUNT OF AN EXTRAORDINARY ACHIEVEMENT: RUGER® FIREARMS

Sturm, Ruger & Company, Inc., had its beginning in a small machine shop occupying a rented frame building in Southport, Connecticut. In January, 1949, with an initial investment of only $50,000 and an idea, William B. Ruger and Alexander M. Sturm started production of a .22 caliber autoloading pistol – a design that was so successful that it became the cornerstone upon which one of the most comprehensive lines of sporting firearms ever made in America was established. After Alex Sturm's death in 1951, William B. Ruger continued to direct the Company until his death in 2002. William B. Ruger, Jr. continued to provide guidance, which helped make this Company a sound and successful enterprise, until his retirement in 2006. The Company has continued to prosper, under new management and guidance from our Board, with new products and fresh perspectives.

Ruger, in this relatively short time, has established itself as a leading small arms design organization, developing a unique and broad line of fine quality sporting, military and police firearms to become one of the world's most famous producers of revolvers, pistols, rifles and shotguns. Since 1949, Ruger craftsmen have built many millions of firearms.

During its five decades of growth and progress under the leadership of William B. Ruger, the Company developed a business philosophy and implemented policies which represent a constructive influence in the life of modern America. From the beginning, Ruger played a positive role in conservation efforts and has supported the interests of shooters through such groups as the National Rifle Association, National Shooting Sports Foundation, and many regional sportsmen's organizations.

The Company has always endeavored to market its firearms for constructive and recreational purposes, to emphasize the traditional and responsible aspects of shooting, to render meaningful public services, and to encourage shooters in constructive, responsible, and safe participation in the shooting sports. Its motto, "Arms Makers For Responsible Citizens®," exemplifies this Company philosophy.

Today, Ruger® is particularly mindful of those elements which have contributed to the creation of its success, and extends heartfelt thanks to its many loyal employees and customers.

Instruction manuals for all Ruger® firearms,
can be downloaded from our website at:

Ruger.com

NOTES

WHY NO WARRANTY CARD HAS BEEN PACKED WITH THIS NEW RUGER® FIREARM

The Magnuson-Moss Act (Public Law 93-637) does not require any seller or manufacturer of a consumer product to give a written warranty. It does provide that if a written warranty is given, it must be designated as "limited" or as "full" and sets minimum standards for a "full" warranty. Sturm, Ruger & Company, Inc. has elected not to provide any written warranty, either "limited" or "full", rather than to attempt to comply with the provisions of the Magnuson-Moss Act and the regulations issued thereunder. There are certain implied warranties under state law with respect to sales of consumer goods. As the extent and interpretation of these implied warranties varies from state to state, you should refer to your state statutes. Sturm, Ruger & Company wishes to assure its customers of its continued interest in providing service to owners of Ruger® firearms.

STURM, RUGER & COMPANY, INC.
411 SUNAPEE STREET
NEWPORT, NEW HAMPSHIRE 03773 U.S.A.
RUGER.COM

ARMS MAKERS FOR RESPONSIBLE CITIZENS®

A COPY OF THE INSTRUCTION MANUAL FOR ANY RUGER® FIREARM IS AVAILABLE FROM THE FACTORY FREE ON REQUEST, OR IT MAY BE DOWNLOADED FROM OUR WEBSITE AT RUGER.COM. THESE INSTRUCTION MANUALS CONTAIN IMPORTANT WARNINGS WHICH MUST BE UNDERSTOOD BEFORE USING THESE FIREARMS.

The Following are Sturm, Ruger & Co., Inc. Trademarks: "Bisley," "Gold Label," "I'm a Ruger American," "LC6," "LCR-357," "LC380CA," "LC Carbine," "LC Charger," "LC9s Pro," "Mark II" (pistols only), "Lite Rack," "Mark III," "Mark IV," "Model 96," "P345," "P345D," "P345PR," "P85," "P89," "P90," "P91," "P93," "P94," "P95," "P97," "PC Carbine," "PC Charger," "Power Bedding," "R.I.O.S.," "Ruger Marksman Adjustable," "Ruger 77/50," "Ruger 10/17," "Ruger 10/22 Takedown" (design), "Ruger One-Shot," "RXM," "Secure Action," "Security-Six," "Service-Six," "77/357," "SFAR," "Single-Seven," "Speed-Six," "SR45," "SR-556C," "SR-556VT," "SR9c," "SR40c," "Super Bearcat," "Target Grey," "10/22-FS," "This is Ruger. This is America.," "Tri-Flex," "22 Charger," "22/45," "22/45 RP," and "Your Next Handgun."

The Following are Registered U.S. Trademarks Belonging to Sturm, Ruger & Co., Inc.: "AR-556," "Arms Makers For Responsible Citizens," "Bearcat," "Blackhawk," "BX-15," "BX-25," "BX-Trigger," Eagle - solid logo design, Eagle w/ "R" (Traditional & Super Duty), Eagle w/ "SR" (Traditional), Eagle w/ "R & RUGER" (Traditional) stacked logo design, Eagle w/ "R & RUGER" (Super Duty) stacked logo design, Eagle w/ "R & RUGER" (Traditional) linear logo design & "Rugged, Reliable Firearms," Eagle w/ "R & RUGER" (Traditional) linear logo design, Eagle w/ "R & RUGER" (Super Duty) linear logo design & "Rugged, Reliable Firearms," Eagle w/ "R & RUGER" (Super Duty) linear logo design, Eagle w/ "R" (Super Duty) holding gun, "EC9s," "Elite 452," "GP100," "Hawkeye," "It's Mine and It's American," "LC380," "LC9," "LC9s," "LCP," "LCR," "LCRx," "M77," "MAX-9," "Match Champion," "Mini-14," "Mini Thirty," "ReadyDot," "Redhawk," "RUGER," "Ruger American," "Ruger American Pistol," "Ruger American Rifle," "Ruger American Rimfire," "Ruger Custom Shop" logo design, "Ruger Precision," "Ruger Precision Rifle" - phrase & logo design, "Ruger 77/17," "Ruger 77/22," "Ruger 77/44," "Ruger-5.7," "Ruger SP101," "Ruger Vaquero," "Rugged, Reliable Firearms," "Security-9," "Security-380," "Silent-SR," "Single-Nine," "Single-Six," "Single-Ten," the "SR" Design, "SR9," "SR40," "SR22" pistols, "SR-556," "SR-762," "SR1911," "Super Redhawk Alaskan," "10/22," "10/22 Takedown," & "Wrangler."

Patents: https://ruger.com/micros/Patents/index.html